DRAWING NO. MFGQ7611-A

| NO. | DESCRIPTION | SPEC' | MAT'L | Q'TY | T/W | REMARK |
|---|---|---|---|---|---|---|
| 01 | DRIVE UNIT | F-44BDT | PUR. | 1 | | SINFONIA |
| 02 | TROUGH | 6t | SS275 | 1 | | |
| 03 | YOKE | 9t | SS275 | 2 | | |
| 04 | LINER | 3t | STS304 | 1 | | |
| 05 | HANGER ASS'Y | – | SS275 SUP6 | 1 | | DRIVE |
| 06 | HANGER ASS'Y | – | SS275 SUP6 | 1 | | TROUGH |

| SPECIFICATION | | | |
|---|---|---|---|
| MATERIAL TO BE HANDLED | – | DRIVE UNIT | F-44BDT |
| BULK DENSITY | – $T/m^3$ | VOLTAGE | – Vx – Hz |
| CAPACITY | – Ton/Hr | VIBRATION | 3600 VPM |
| GRAIN SIZE(mm) | – | CONTROLLER | – |
| MOISTURE(%) | – | Q'TY | – |
| TEMPERATURE(°C) | – | APP. WEIGHT | 1000kg |

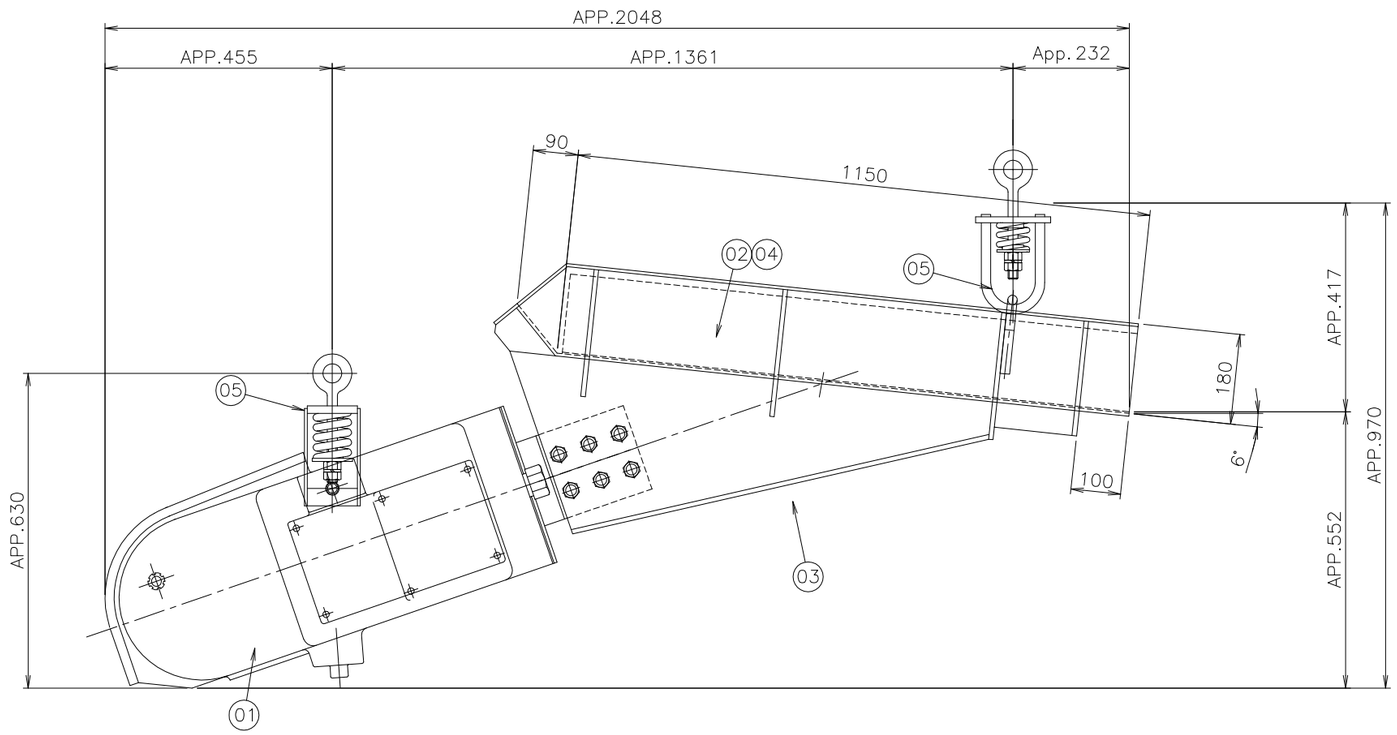


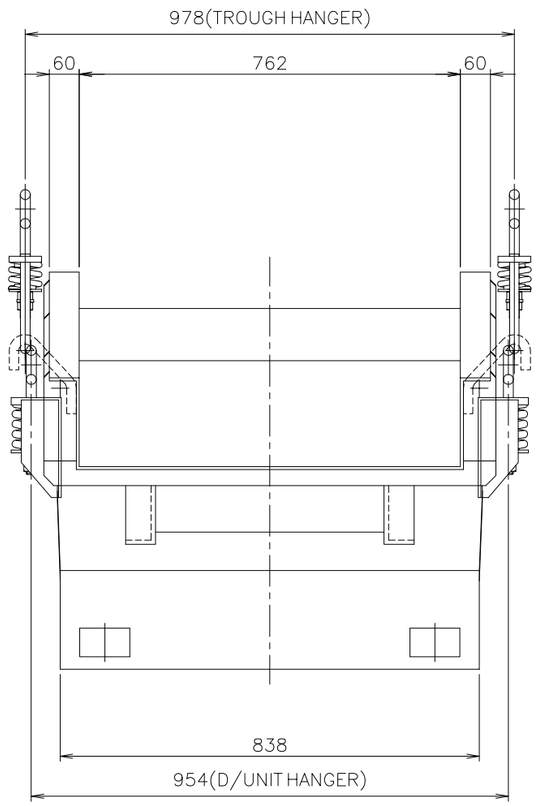


| MARK | DESCRIPTION | NAME | DATE. |
|---|---|---|---|
| 2 | | | |
| 1 | | | |

REVISIONS RECORD

| NO. | DESCRIPTION | SPEC' | MAT'L | Q'TY | T/W | REMARK |
|---|---|---|---|---|---|---|

CUSTOMER.

NAME: F-44BDT-UCFB7611 OUTLINE DIMENSION

SHINWHA Electric Co., Ltd.

DRAWING NO. MFGQ7611-A

| APPROVED | CHECKED | DESIGNED | DRAWN | SCALE. 1/6 | DATE. 2022.11.24 |
|---|---|---|---|---|---|
| | HONG | LEE | JEONG | REV. 0 | SH NO. 1 OF 1 |

A1(841MM x 594MM)